TELESCOPING CAMERA POLE
INSTALLATION GUIDE

CE-CP3W • CE-CP6W • CE-CP12W • CE-CP17W
CE-CP3B • CE-CP6B • CE-CP12B • CE-CP17B

CAUTION: This mount is intended for use only with the maximum weights indicated. Use with products heavier than the maximum weights indicated may result in instability causing possible injury. This product is intended to mount to a existing steel support truss of the building or in conjunction with channel strut.
This mount is NOT designed to mount to a wooden surface.

Maximum Load Capacity: 10 lbs / 4.5 kgs

Included Items

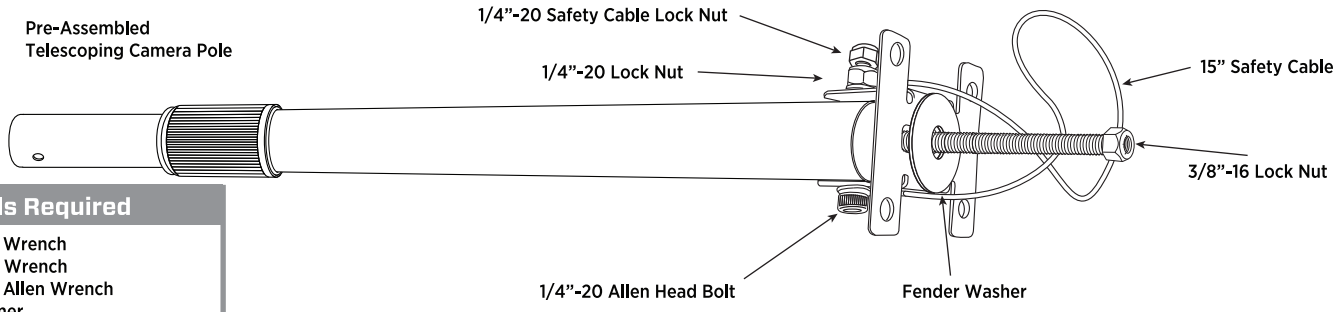

Tools Required

7/16" Wrench
9/16" Wrench
3/16" Allen Wrench
Hammer
Power Drill with 3/16" drill bit

1. Remove Hardware

a. Using a 9/16" wrench, remove the 3/8"-16 Lock Nut and Fender Washer from the mounting bolt.

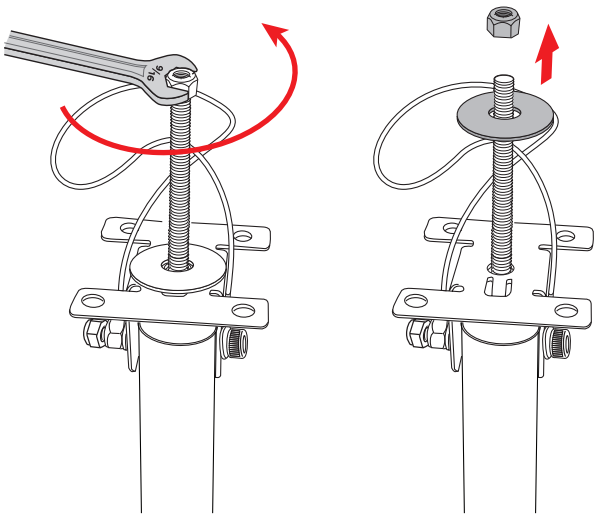

b. Using a 7/16" wrench and 3/16" Allen wrench, remove the 1/4"-20 Safety Cable Lock Nut and separate cable from bolt.

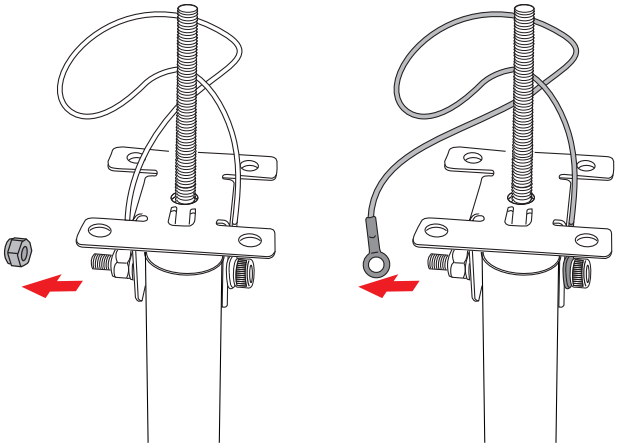

2. Secure to Truss or Channel Strut

a. Insert mounting bolt from camera pole between the gap in the truss or channel strut. If no gap is available drill a hole into steel mounting surface.

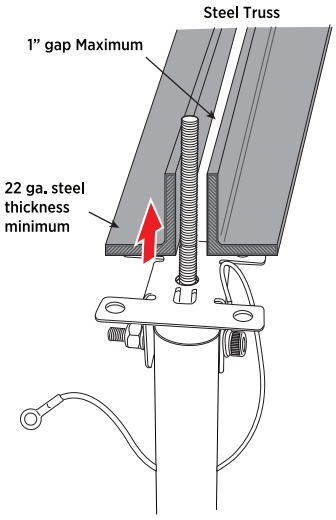

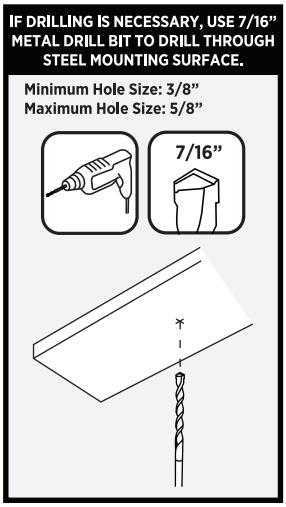

b. Place the Fender Washer and 3/8"-16 Lock Nut onto the mounting bolt. Tighten the 3/8"-16 Lock Nut with a 9/16" wrench.

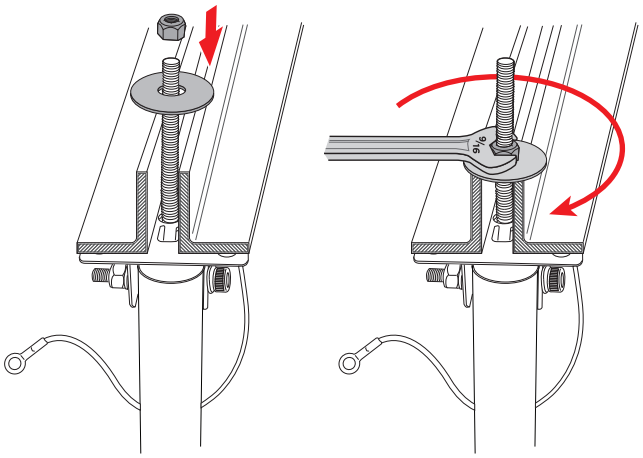

3. Attach Safety Cable

Loop the Safety Cable around the steel truss or channel strut. Place the end of the Safety Cable and 1/4"-20 Safety Cable Lock Nut onto the Allen head bolt. Tighten Lock Nut with 7/16" wrench and 3/16" Allen wrench.

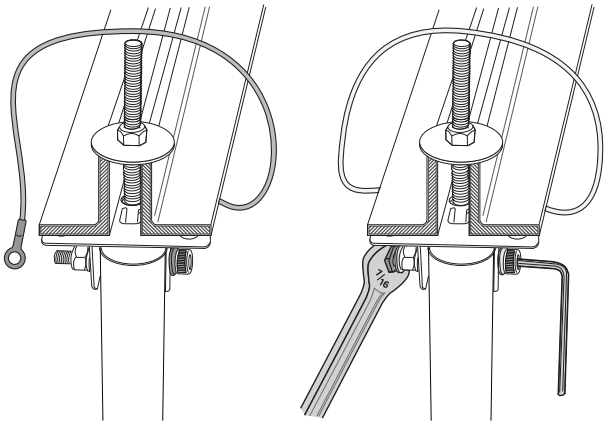

4. Adjust Height

While supporting the pole by the bottom end, loosen the twist-lock collar by turning it counter-clockwise. Extend the pole by gently lowering it to the desired height.

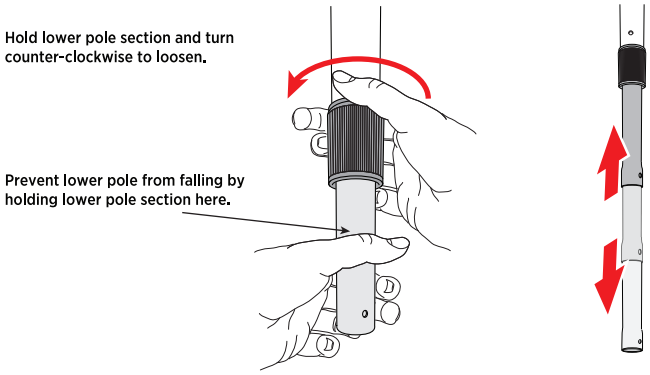

Once the height of the pole has been adjusted, lock the pole in position by rotating the twist-lock collar clockwise. The collar should be hand tightened as snug as possible to prevent the pole from expanding (dropping down).

5. Install Rivet

After the pole is set to its desired length, drill a 3/16" hole through one side of the inner pole at the pre-drilled hole in the outer pole. Insert the rivet until the backside of the head is flush with the outer surface of the pole. While supporting the backside of the pole, strike the pin sharply with a hammer to expand the rivet.

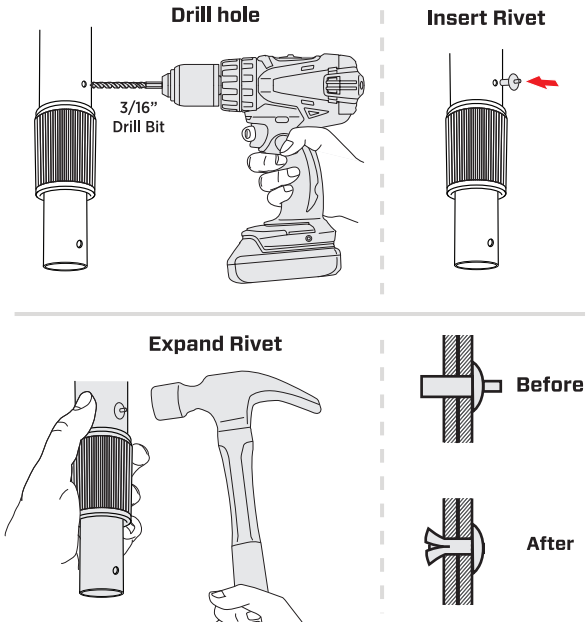

6. Conceal Cables

Feed necessary cables through the top of the pole and out through the bottom. If BNC connector is already installed onto coax cable from head unit, it may be required to temporarily remove the bolt that attaches the mounting head to the camera pole.

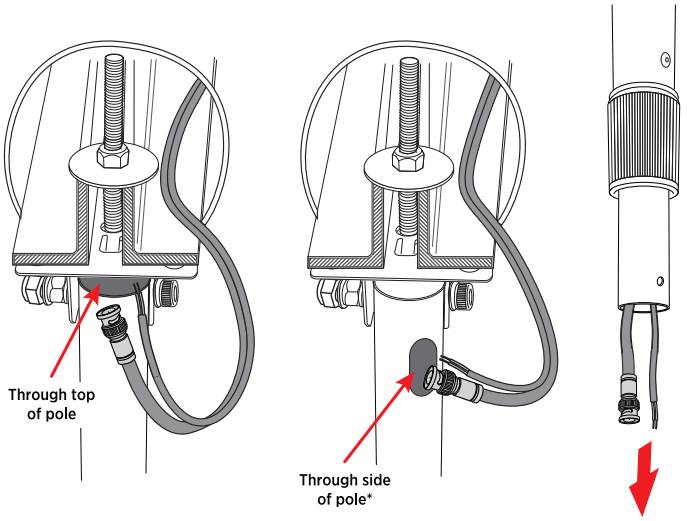

*Some poles may come with a side-exit hole located near the top of the pole. If equipped with this hole, cables can be routed through this hole instead of through the top of the pole.

7. Mount Camera to Pole

a. Connect the appropriate pendant mount cap (with 3/4" EMT conduit set-screw connector) to the dome camera according to the pendant mount instructions.

Camera pendant mount shown not included, sold separately.
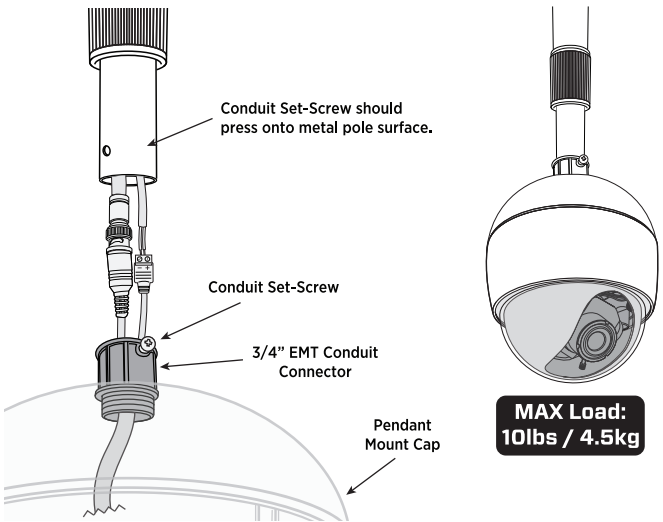
b. Make power and video connections to the camera, and connect the pendant mounted camera assembly onto the extension pole. Slide the 3/4" EMT conduit connector over the end of the extension pole. Tighten the set-screw on the conduit connector so it presses onto the side of the pole.