clintonelectronics

CE-CPPA-NPS

3/4” EMT to 1-1/2” NPS Female Adapter

⚠ Maximum Load Capacity: 10 lbs / 4.53 kgs ⚠



KEY FEATURES:

Adapt any camera or device with 1½” NPS male threads to a Telescoping Ceiling Mount Camera Pole.

- Installs onto a Telescoping Camera Pole*
- Includes Mounting Hardware

**Telescoping Camera Pole Sold Separately*

GENERAL	
Material	Aluminum
Dimensions	2.14” (Dia) x 1.76” (H) 54.36mm (Dia) x 44.7mm (H)
Weight	0.156 lb / 0.07 kg

CAMERA POLE COMPATIBILITY	
CE-CP3W	Adjustable from 1’ 3” to 2’ 7” - White
CE-CP3B	Adjustable from 1’ 3” to 2’ 7” - Black
CE-CP6W	Adjustable from 3’ to 5’ 9” - White
CE-CP6B	Adjustable from 3’ to 5’ 9” - Black
CE-CP12W	Adjustable from 6’ 2” to 11’ 9” - White
CE-CP12B	Adjustable from 6’ 2” to 11’ 9” - Black

DIMENSIONS:

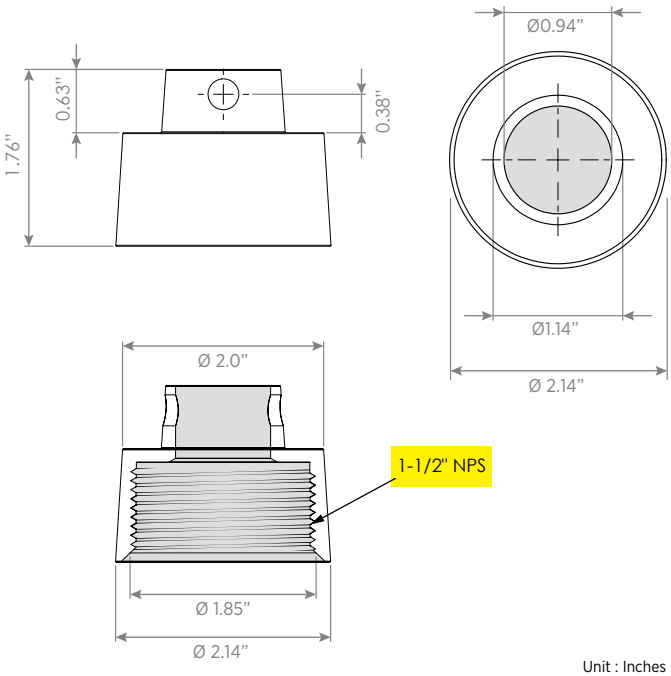

Unit : Inches

1-1/2 NPT is not compatible with G 1-1/2” threads.
Verify camera/device manufacturer specifications.

Clinton reserves the right, without notification, to make changes in product design & specification.