clintonelectronics

CE-CP6W (White) / **CE-CP6B** (Black)

6ft Telescoping Ceiling Mount Camera Pole

PATENTED

c UL us LISTED

Maximum Load Capacity: 10 lbs / 4.5 kgs

CE-CP6W
(Compressed)

CE-CP6B
(Extended)

KEY FEATURES:

- Mounts to Steel Web Truss or Strut Channel with One Bolt
- Adjustable from 3' to 5' 9" from Ceiling
- Easily Pendant Mount Indoor/Outdoor Dome Cameras
- Route Cables Inside the Pole for a Clean Apperance
- 3/4" EMT Dlameter End
- Includes Safety Cable (15ft) & 3/4" EMT Threaded Conduit Adapter
- Adjustable Level
- UL Listed

**Pendant Mount For Camera Sold Separately*

CE-CP6W (White) / CE-CP6B (Black)	
Pole Dimensions	Adjustable from 3' to 5' 9"
Pole Weight	5 lbs / 2.267kg
Materials	Powdercoated Steel
Max Camera Weight	10 lbs / 4.5 kgs

DIMENSIONS:

Unit : Inches

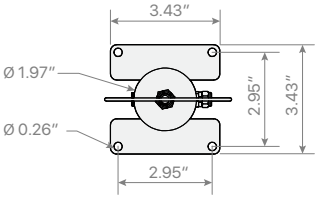

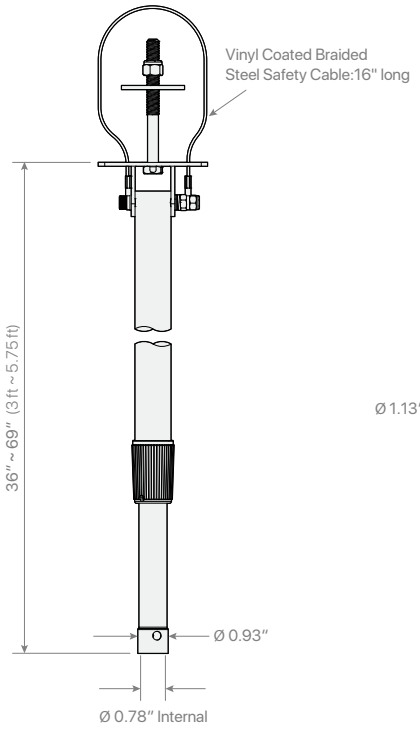

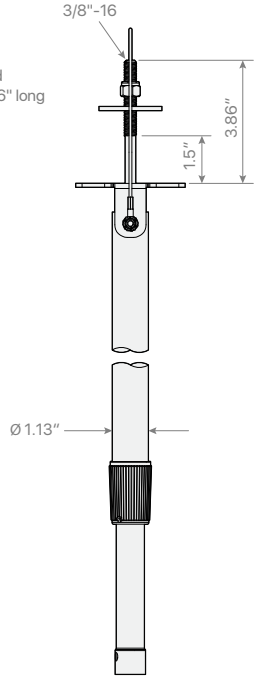

Clinton reserves the right, without notification, to make changes in product design & specification.