# clintonelectronics

## CE-CM-SX-6 (White) / CE-CM-SX-6-B (Black)

6ft Telescoping Ceiling Mount LCD/PVM Pole

PATENTED

c UL us LISTED

**⚠ Maximum Load Capacity: 35 lbs / 15.875 kgs ⚠**

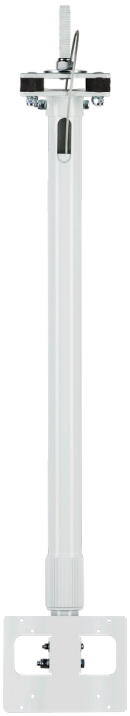

**CE-CM-SX-6**
(Compressed)

**CE-CM-SX-6-B**
(Extended)

### KEY FEATURES:

- Recommended for LCDs or PVMs up to 35 lbs
- Mounts to Steel Web Truss or Strut Channel with One Bolt
- Adjustable from 3' to 5' 6" from Ceiling
- Adjustable Tilt (0°-40°) and Pan (360°)
- Route Cables Inside the Pole for a Clean Apperance
- Includes Safety Cable (15ft)
- Leveling Plate for Uneven Ceilings
- VESA 75 & 100 (M4)
- UL Listed

| CE-CM-SX-6 (White) / CE-CM-SX-6-B (Black) | |
|---|---|
| VESA Hole Patterns | 75x75, 100x100 (M4) |
| Pole Dimensions | Adjustable from 3' to 5' 6" |
| Pole Weight | 8 lbs / 3.628kg |
| Materials | Aluminum Pole / Steel Mounting Plate & VESA Plate |
| Max LCD/PVM Weight | 35 lbs / 15.875 kgs |

### DIMENSIONS:

Unit : Inches

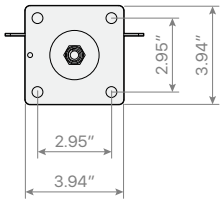


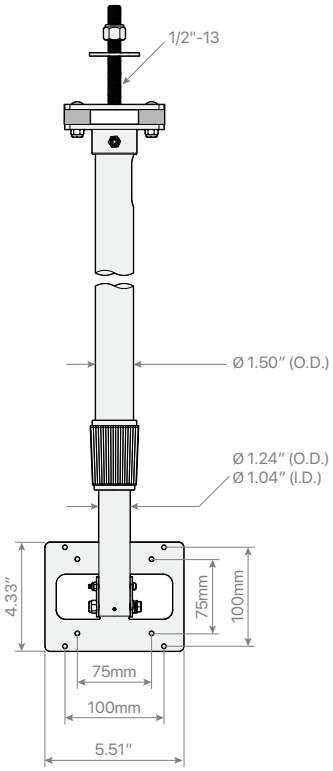


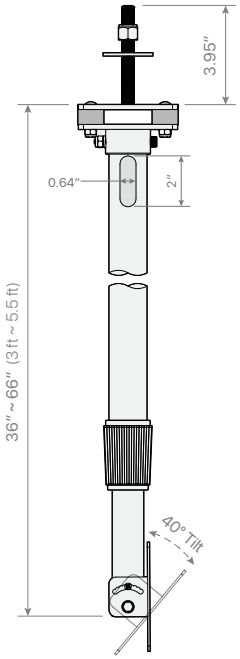




Clinton reserves the right, without notification, to make changes in product design & specification.